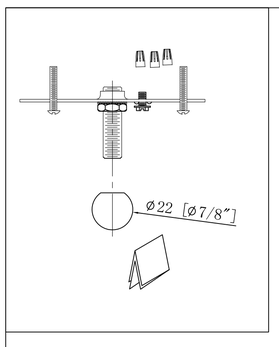

INNOVATIONS LIGHTING
CREATIVITY MEETS EVOLUTIONARY DESIGN©

DESIGN COPYRIGHT - 05/20/2025

ALL RIGHTS RESERVED AND MAY NOT BE DUPLICATED WITHOUT OUR WRITTEN PERMISSION

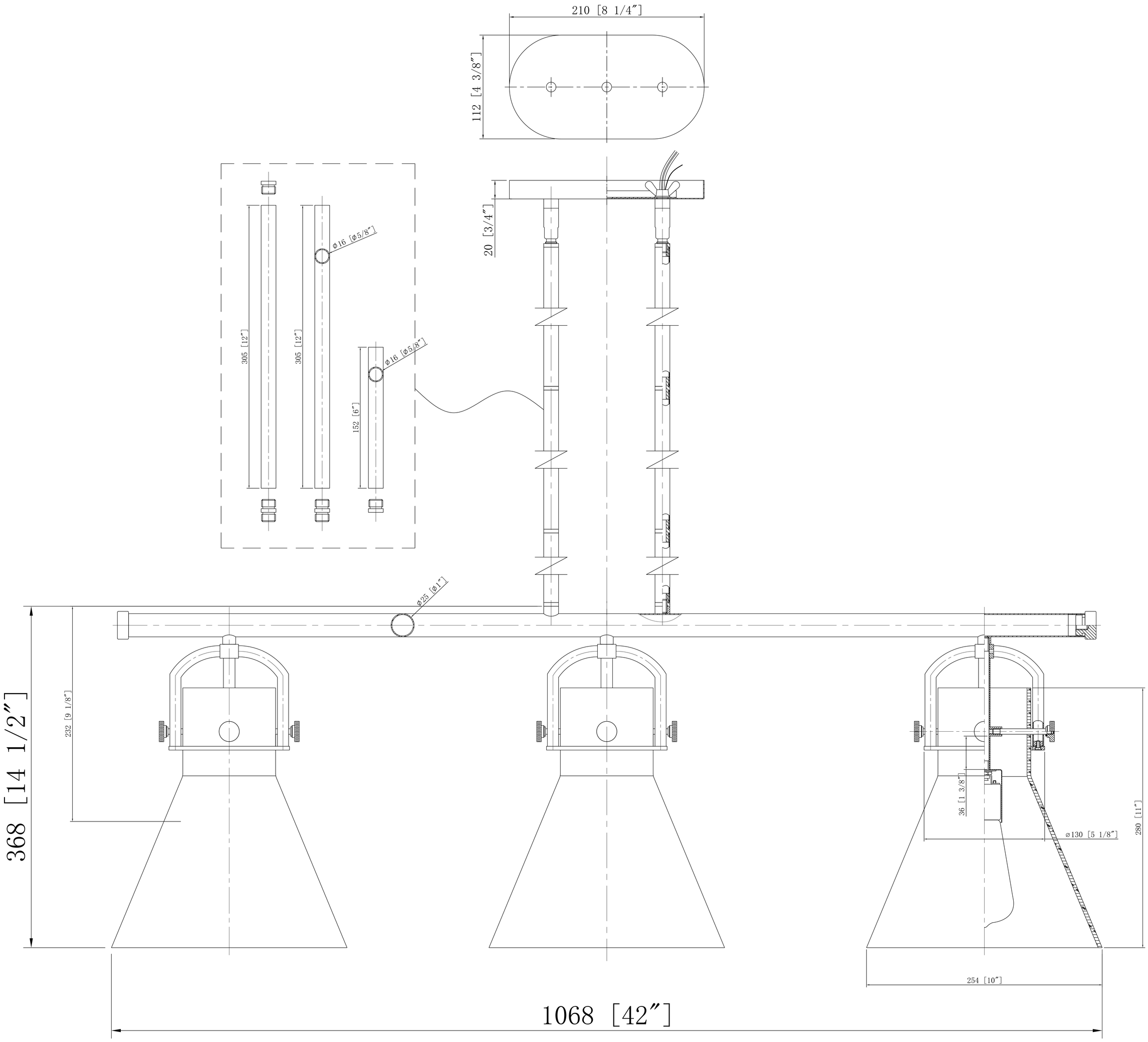

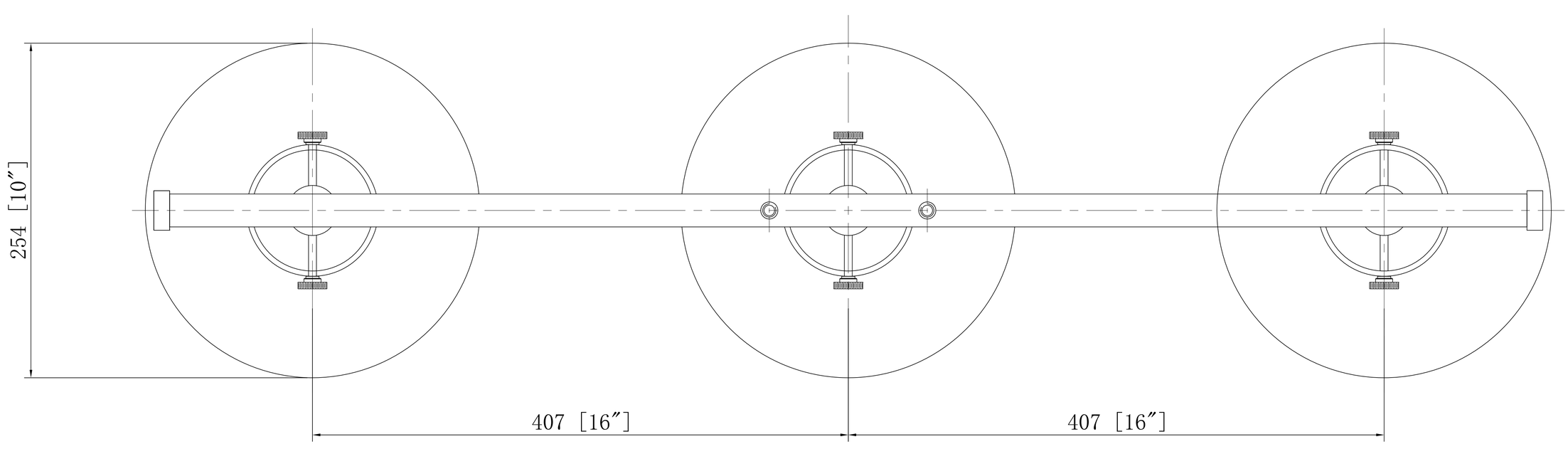

ITEM: 410-3I-G411-10